Cordless

VOOM

BY **VOOM Power Cleaning Tool**

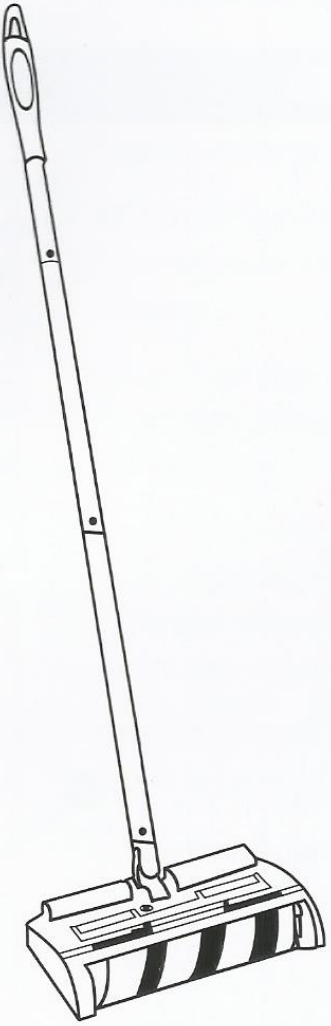

Instruction Manual

Thank you for purchasing the Cordless VOOM Power Cleaning Tool the lightweight,cordless power sweeper that swivels and picks up like no other. VOOM Power Cleaning Tool easily cleans all types of messes on all kinds of surfaces like hardwood,tile,even carpet. Change the way you clean with the VOOM Power Cleaning Tool!

WHAT' S INCLUDED:

1. Sweeper Head
2. Charging Part
3. On/Off power Button
4. Air Filters
5. Roller Brush Release Tabs
6. Roller Brush
7. Dirt Tray Release Button
8. Dirt Tray Door
9. Battery Compartment
10. Charging Cord
11. Hair Cleaning Tool

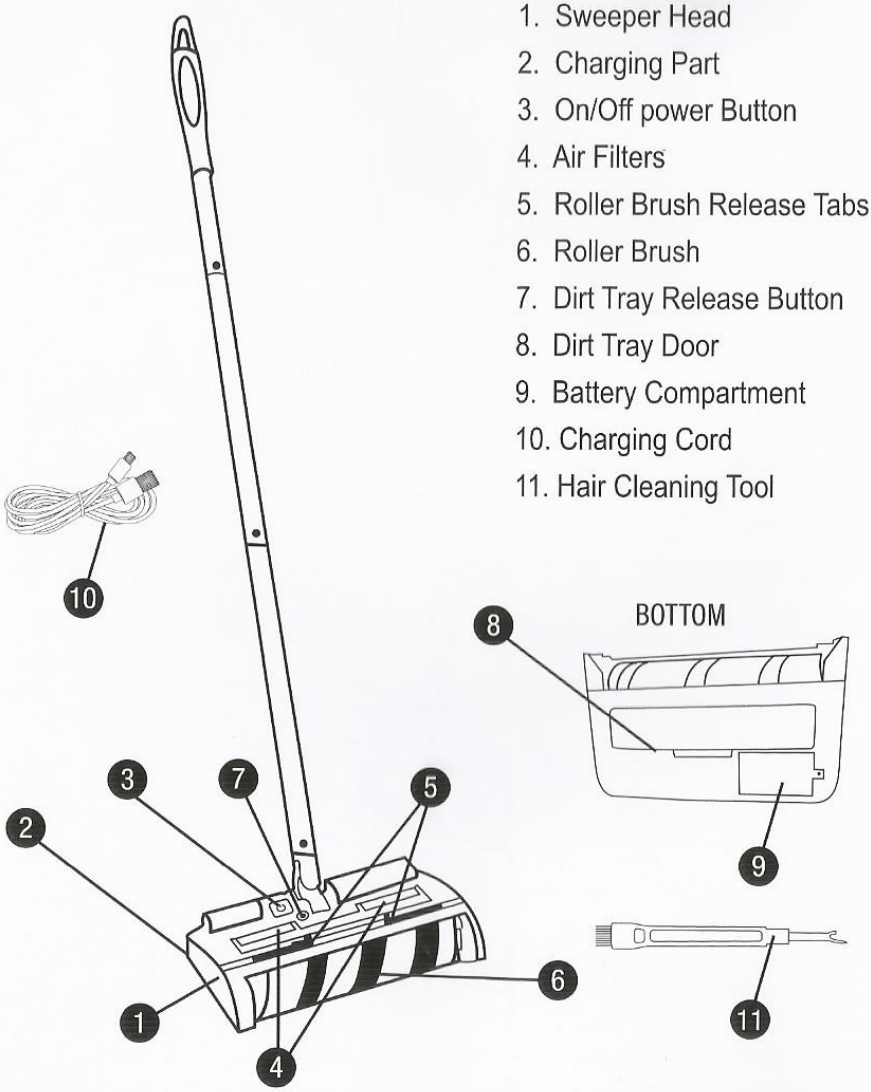

HOW TO ASSEMBLE:

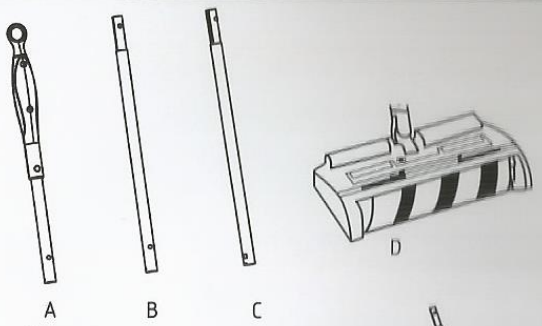

A. Upper Pole
B. Middle Pole
C. Lower Pole
D. Sweeper Head

1. Slide "Pole A" onto "Pole B" until secure

2. Slide "Pole B" onto "Pole C" until secure

3. Align "Pole C" with " Sweeper Head D", and push firmly together until they slide into place

HOW TO CHARGE:

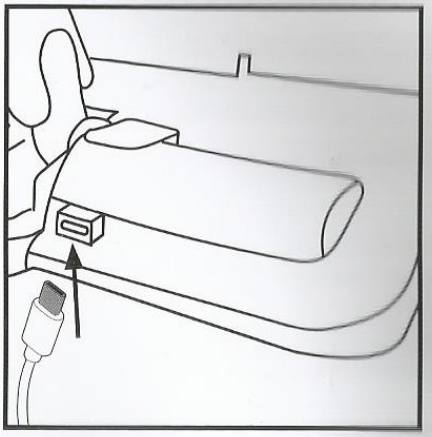

Before first use, fully charge your VOOM Power Cleaning Tool Insert small end(USB-C end) of Charging Cable into Charging Port and large end into a USB port or USB power adapter (not included). Indicator light is red when charging and will turn green when fully charged. Remove Charging Cable when finished charging. If battery is low, indicator light will blink RED to let you know it is time to re-charge your Voom Sweeper.

HOW TO USE:

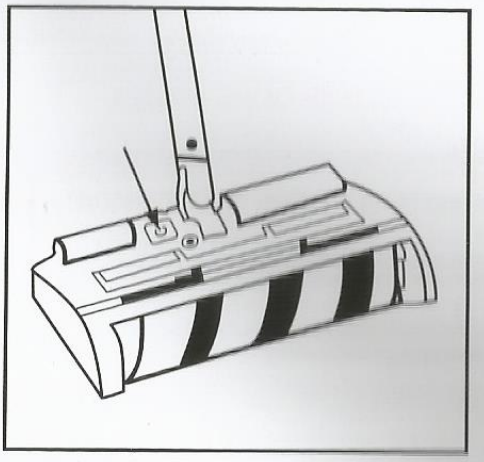

After assembling and charging battery, VOOM Power Cleaning Tool is ready to use. TO turn on, press the On\Off Power Button on the Sweeper Head. To turn off, press the On/Off Power Button again.

For Best Performance: move unit slowly over surfaces until clean.

When done, empty Dirt Tray as directed in CARE INSTRUCTIONS section.

If roller gets struck, unit will stop working to protect motor, and indicator light will blink GREEN for 10 seconds. Turn power off, and then on again to reset.

CARE INSTRUCTIONS:

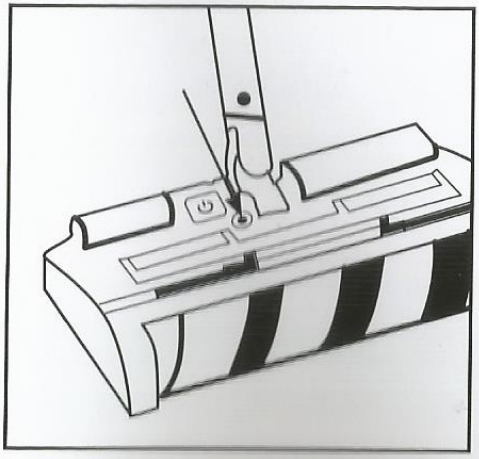

EMPTYING THE DIRT TRAY

We recommend emptying VOOM Power Cleaning Tool after each use. Hold VOOM Power Cleaning Tool over a garbage can, press Dirt Tray Release Button to open Dirt Tray Door. When all dirt and debris has been emptied, close Dirt Tray Door until you hear it lock closed.

CARE INSTRUCTIONS CONTINUED:

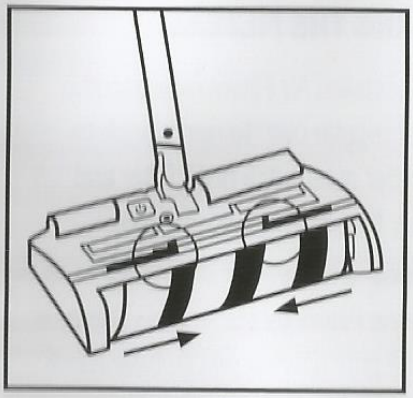

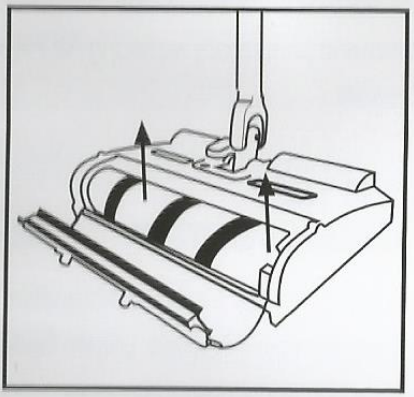

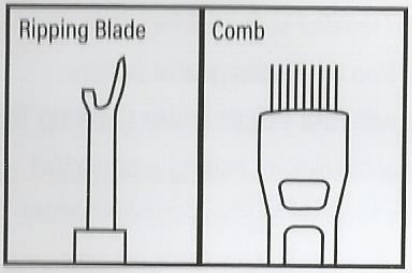

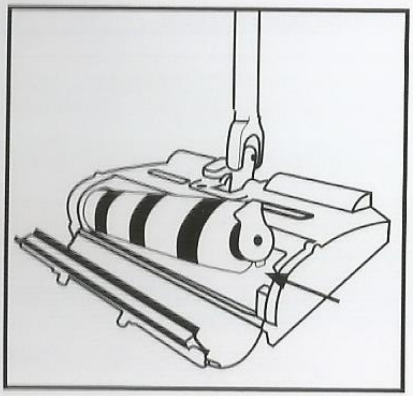

CLEANING THE ROLLER

We recommend to periodically clean VOOM Power Cleaning Tool's Roller Brush to maintain best performance. It can also be replaced.

1. Squeeze Roller Brush Release Tabs in and gently pull Roller Brush cover door open.
2. Lift Roller Brush out of Roller Brush Compartment and remove any debris or hair that may have wrapped around Roller Brush.

Caution: Roller Brush Cleaning Tool has sharp top and ripping blade. Avoid contact with tip and ripping blade.

3. Use Roller Brush Cleaning Tool to cut and remove tangled debris. Glide ripping blade along shaft of Roller Brush and use comb end to remove debris.
4. Rinse Roller Brush under running water until clean. Let air dry before re-installing.
5. Place Roller Brush back into Sweeper Head by lining up notch on right side of Roller Brush with meeting point inside Roller Brush Compartment.Press until it clicks into place and close Roller Brush cover door.

CARE INSTRUCTIONS CONTITUED:

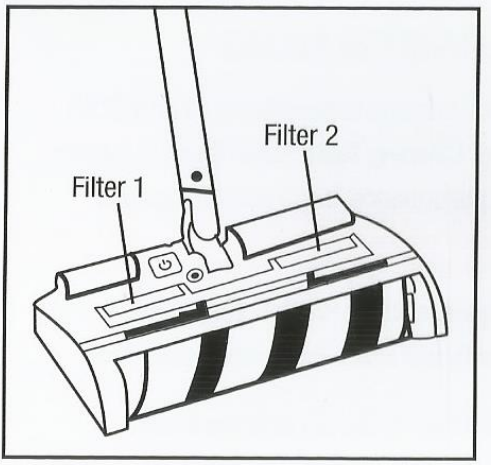

CLEANING THE FILTERS

The pre-installed Air Filters may become dirty after regular use. To remove, place finger under outer edge of Air Filter and pop it out. Repeat on opposite side.

Rinse under a faucet until clean and let air dry. Replace Air Filters by placing into Sweeper Head and prss down untill you hear it lock into place. Repeat on opposite side.

We recommend periodically replacing Air Filters for best results.

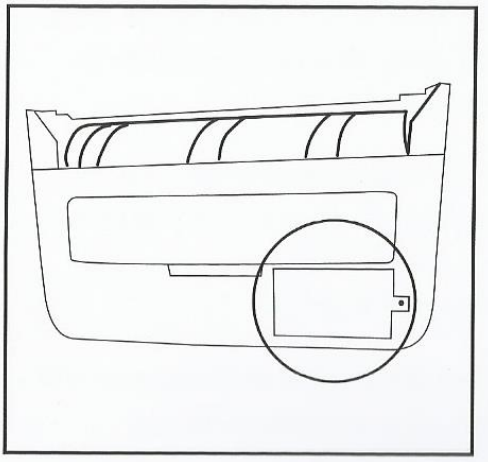

CHANGING THE RECHARGEABLE BATTERY

VOOM Power Cleaning Tool's Rechargeable Battery is replaceable if needed. Locate Battery Compartment on underside of Sweeper Head and remove screw holding door in place. Pop out Rechargeable Battery. Replace with new VOOM Power Cleaning Tool Rechargeable Battery making sure contact points are properly touching on both battery and unit. Replace Battery Compartment door and screw back into place.

WARNINGS:

- Make sure VOOM Power Cleaning Tool is securely assembled before use.
- Never use VOOM Power Cleaning Tool to clean up fluids or wet messes, especially not flammable or combustible liquids.
- Keep fingers, hair,and all other body parts and clothing away from the rotating cleaning brushes.
- Do NOT use VOOM Power Cleaning Tool to clean up any burning or lighted materials such as cigarettes, matches, and ashes.
- Do NOT use on coarse concrete surfaces.
- Do NOT use outdoors: patios, decks, or rough surfaces.
- VOOM Power Cleaning Tool mechanical parts are not user-serviceable.Contact a qualified professional for service.
- Make sure VOOM Power Cleaning Tool is turned off and that the batteries are removed before cleaning its rotating brushes of hair,debris,etc.
- Store your VOOM Power Cleaning Tool indoors in a dry, safe place.

VOOM™ POWER CLEANING TOOL ITEM NO. 6269FE DISTRIBUTED BY EMSON®
NY, NY, 10001 ©2024 EMSON® ALL RIGHTS RESERVED. MADE IN CHINA.